Specifications

TFT-LCDmodule

Model No：QY40039C0-01

Customer name:

The project name:

For Customer's Acceptance	
Approved by	**Comment**

	Signature	Date
Prepared by		
Checked by		
Approved by		

Contents

1 General Description 3
1.1 Features 3
1.2 Application 3
2 Outline Dimension 4
3 Electrical Characteristics 5
3.1 TFT-LCD Module 5
3.2 Back-Light Unit 5
4 Block Diagram 6
5 TFT-LCM Interface Specification 7
6 Description of Interface'Signal 8
6.1 RGB Interface Timing Characteristics 8
6.2 DC Characteristics 8
6.3 AC Characteristics 9
6.4 Reset Characteristics 9
7 Optical Specification 10
8 Environment Absolute Maximum Ratings 13
9 Reliability Test Items 13
10 Inspection Standard 14
11 Package 15
12 Precautions 16
12.1 Handling 16
12.2 Storage 16
12.3 Operation 17
12.4 Touch Panel Mounting Notes 17
12.5 Others 18
13 Records of Version 19

1 General Description

QY40039C0-01 is a transmissive type a-Si TFT-LCD (amorphous silicon thin film transistor liquid crystal display) module, which is composed of a TFT-LCD panel, a driver circuit a backlight unit, The panel size is 3.95inch and thresolution is 480x480. High image quality a-Si TFT LCD module. Partial-screen display function is available. Sleep and Stand-by modes are available for power saving.

1.1 Features

No	Item	Specification	Remark
1	Display Mode	Normally Black	
2	Screen Size	3.95inch (diagonal)	
3	Resolution	480XRGBX480	
4	Color Number	16.7M	
5	Color Arrangement	RGB-stripe	
6	Driver IC	ST7701S	
7	Back Light	White LED*8	
8	Viewing Direction	ALL O'clock	
9	Interface	RGB24BIT	
10	Surface Treatment	UV Cut	

1.2 Application

- Mobile phone.
- Portable multimedia device.

2 Outline Dimension

The mechanical detail is shown in Fig. 1 and summarized in Table 1 below.

Parameter	Specifications	Unit
Outline dimensions	78.8(W) x81.7(H) x 2.2+_0.1(D) (LCM,no include FPC)	mm
Active area	71.86(W) x70.18(H)	mm
Resolution	480(H)RGBx 480(V) dots	-
Dot size	0.1497 (H) ×0.1462	mm
Module brightness	360	cd/㎡

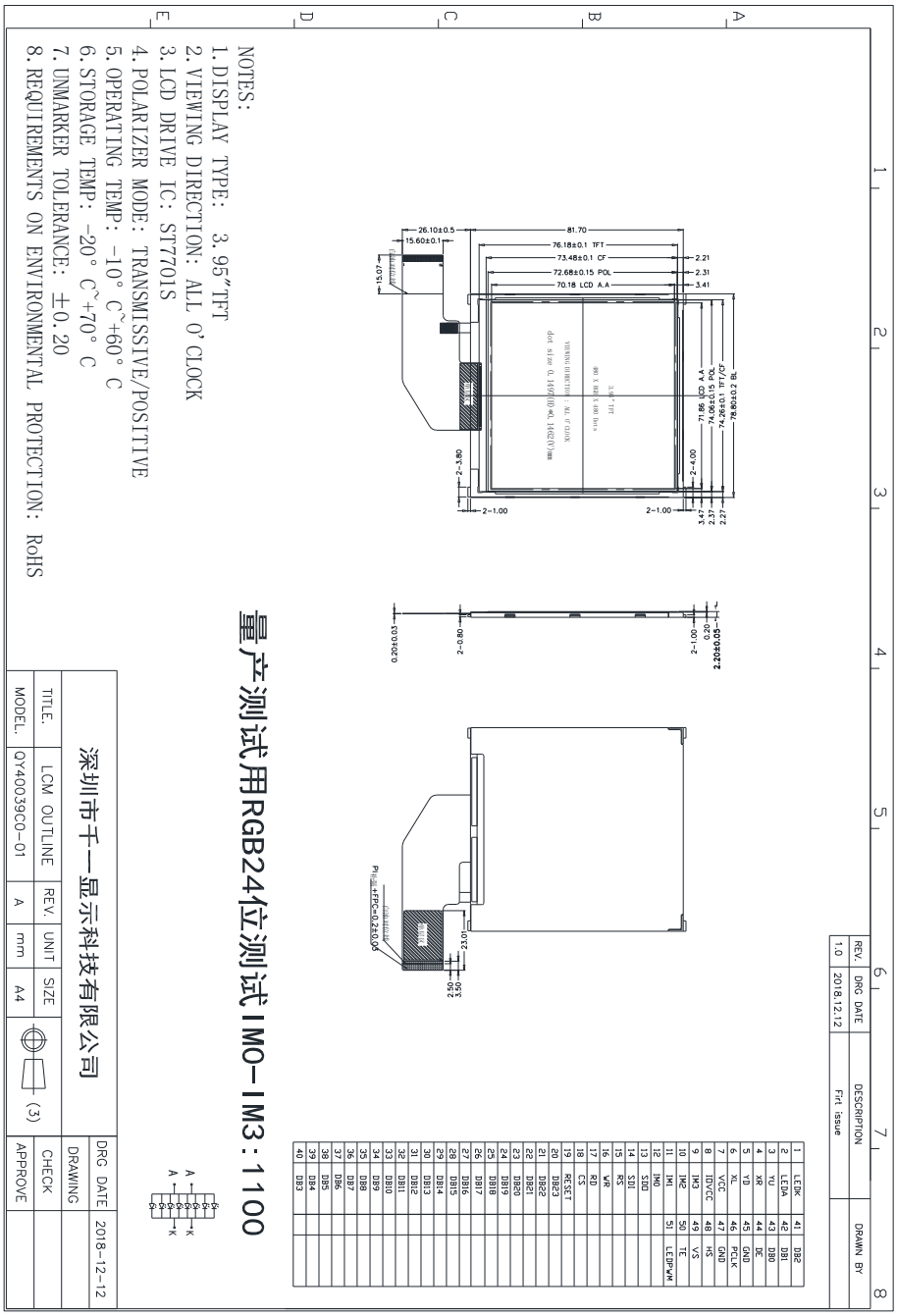

Figure 1: Module specification of the module

3 Electrical Characteristics

3.1 TFT-LCD Module

Ta=25℃

Item	Symbo	Value Min	Typ	Max	Unit	Notes
Supply Voltage for logic	Vcc	2.5	2.8	3.3	V	
	Vci	2.5	2.8	3.3		
TFT Gate ON Voltage	VGH *	10	15	20	V	
TFT Gate OFF Voltage	VGL	-15	-8	-5	V	
Operating temperature	Top	-20		+70	℃	
Storage temperature	Tst	-30		+80	℃	

3.2 Back-Light Unit

Item	Symbol	Min.	Typ.	Max.	Unit	Remark
Current	IF	120	160	200	mA	IF=160mA VF=3V
Forward voltage	VF	2.8	3	3.2	V	
Chroma	X	0.240		0.28		
	Y	0.250		0.29		
Brightness	L	5000			Cd/m2	
Uniformity	UBL	80			%	

- 8 LEDs used
- The luminous intensity of LED is strongly dependent on the driving current.
- It is recommended the input of backlight to be constant current rather than constant voltage.

Pin No.	Symbol	Functional	Notes
1	LEDK	Power supply Cathode input for backlight	
2	LEDA	Power supply for backlight anode input terminal.	
3	YU	NC	
4	XR	NC	
5	YD	NC	
6	XL	NC	
7	VCC	Power supply 2.8v	
8	IOVCC	Power supply 1.8v	
9~12	IM3-IM0	The System interface mode select	
13	SDO	Serial data output pin used for the SPI Interface.	
14	SDA	register select signal.	
15	RS	The SPI interface (DCX): The signal for command or	
16	WR	WRX: Writes strobe signal to write data when WRX is “Low” in 80-series MPU I/F. SCL: A synchronous clock signal in SPI I/F.	
17	RD	Reads strobe signal to write data when RDX is “Low” in 80-series MPU interface	
18	CS	chip select signal	
19	RESET	The external reset input	
20~43	DB23-DB0	Data interface	
44	DE	Data enable signal	
45	GND	Power Ground	
46	PCLK	Serial data clock signal interface	
47	GND	Power Ground	
48	HSYNC	Horizontal sync	
49	VSYNC	Vertical sync	
50	TE	For IC Test	
51	LEDPWM	The PWM frequency output for LCD driver control	

6 Description of Interface'Signal

6.1 RGB Interface Timing Charateristics

Signal	Symbol	Parameter	MIN	TYP	MAX	Unit	Description
VS	t_{VSYNS}	VSYNC setup time	10	-	-	ns	
	t_{VSYNH}	VSYNC hold time	10	-	-	ns	
HS	t_{HSYNS}	HSYNC setup time	10	-	-	ns	
	t_{SCYCR}	HSYNC hold time	10	-	-	ns	
	t_{HVPD}	HSYNC to VSYNC falling edge	400	-	-	ns	
PCLK	t_{DCYC}	PCLK cycle time	33	-	125	ns	
	t_{DLW}	PCLK "L" pulse width	11	-	-	ns	
	t_{DHW}	PCLK "H" pulse width	11	-	-	ns	
	f_{DFREQ}	PCLK frequency	8	-	30	MHz	
DE	t_{DCSS}	DE setup time	10	-	-	ns	
	t_{DCSH}	DE hold Time	10	-	-	ns	
D0~D23	t_{DDS}	RGB Data setup time	10	-	-	ns	
	t_{DDH}	RGB Data hold time	10	-	-	ns	

6.2 DC Characteristics

Typical Operating Conditions (Ta=25℃)

Item	Symbol	Values			Unit	Remark
		Min	Typ	Max.		
Power Supply	Vcc	2.3	3.3	4.8	V	
Power Supply	IOVCC	1.65	1.8	3.3	V	
Normal mode Current consumption	Icc	-	40	-	mA	Vcc=2.8V
TFT Gate ON Voltage	V_{GH}	12		18	V	
TFT Gate OFF Voltage	V_{GL}	-13.5		-6	V	

6.3 AC Characteristics

Signal	Symbol	Parameter	MIN	MAX	Unit	Description
WRX	t_{WC}	Write cycle	33	-	ns	
	t_{WRH}	Control pulse "H" duration	15	-	ns	
	t_{WRL}	Control pulse "L" duration	15	-	ns	
RDX(ID)	t_{RC}	Read cycle (ID)	160	-	ns	When read ID data
	t_{RDH}	Control pulse "H" duration (ID)	90	-	ns	
	t_{RDL}	Control pulse "L" duration (ID)	45	-	ns	
RDX(FM)	t_{RCFM}	Read cycle (FM)	400	-	ns	When read from frame memory
	t_{RDHFM}	Control pulse "H" duration (FM)	250	-	ns	
	t_{RDLFM}	Control pulse "L" duration (FM)	150	-	ns	
D/CX	t_{AST}	Address setup time (Write)	0	-	ns	
		Address setup time (Read)	10	-	ns	
	t_{AHT}	Address hole time	2	-	ns	
D[17:0]	t_{DST}	Data setup time	15	-	ns	
	t_{DHT}	Data hold time	10	-	ns	
	t_{RAT}	Read access time (ID)	-	40	ns	
	t_{RATFM}	Read access time (FM)	-	150	ns	
	t_{ODH}	Output disable time	5	-	ns	

Note 1) VDDI=1.65 to 3.3V, VDD=2.3 to 4.8V, VSS=VSSI=DVSS=0V, Ta=-30 to 70 ºC (to +85 ºC no damage)
VDD means VDDA, VDDR, VDDB and VSS means VSSA, VSSR, VSSB
Note 2) The input signal rise time and fall time (tr, tf) is specified at 15 ns or less.
Logic high and low levels are specified as 20% and 80% of VDDI for Input signals.

6.4 Reset Timing

Signal	Symbol	Parameter	MIN	TYP	MAX	Unit	Description
RESX	t_{RESW}	Reset "L" pulse width (Note 1)	10	-	-	μs	
	t_{REST}	Reset complete time (Note 2)	-	-	5	ms	When reset applied during Sleep In Mode
			-	-	120	ms	When reset applied during Sleep Out Mode

Note 1) Spike due to an electrostatic discharge on RESX line does not cause irregular system reset according to the table below.

RESX Pulse	*Action*
Shorter than 5μs	*Reset Rejected*
Longer than 10μs	*Reset*
Between 5μs and 10μs	*Reset Start*

Note 2) During the resetting period, the display will be blanked (The display is entering blanking sequence, which maximum time is 120 ms, when Reset Starts in Sleep Out –mode. The display remains the blank state in Sleep In–mode) and then return to Default condition for H/W reset.

Note 3) During Reset Complete Time, values in OTP memory will be latched to internal register during this period. This loading is done every time when there is H/W reset complete time (t_{REST}) within 5ms after a rising edge of RESX.

Note 4) Spike Rejection also applies during a valid reset pulse as shown below:

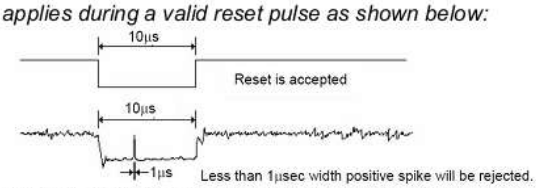

Note 5) It is necessary to wait 5msec after releasing RESX before sending commands. Also Sleep Out command cannot be sent for 120msec

7. Optical Specification

NOVATEK CONFIDENTIAL
NOT DISCLOSURE

4.0 OPTICAL CHARACTERISTICS

4.1 Optical Specification

Item		Symbol	Condition	Min.	Typ.	Max.	Unit	Note
Transmittance (with Polarizer)		T (%)	Θ=0 Normal viewing angle	–	(4.2)	–	%	Measuring with normal polarizer，Reference Only Base on Vop=5.1V
Transmittance (without Polarizer)		T (%)		–	(14.7)	–	%	
Contrast Ratio		CR		640	800	–	–	(1)(2)
Response Time		$T_{R+}T_F$		–	25	35	msec	(1)(3)
Color Gamut	(%)			55	60	–	%	C-light
Color Chromaticity (CIE1931)	White	W_x		–	(0.302)	–	–	(1)(4) CF glass C-light
		W_y		–	(0.325)	–		
	Red	R_x		–	(0.624)	–	–	
		R_Y		–	(0.329)	–		
	Green	G_x		–	(0.288)	–	–	
		G_Y		–	(0.522)	–		
	Blue	B_x		–	(0.136)	–	–	
		B_Y		–	(0.137)	–		
Viewing Angle	Hor.	Θ_L	CR>10	70	80	–	–	(1)(4) Measuring with normal polarizer，Reference Only
		Θ_R		70	80	–		
	Ver.	Θ_U		70	80	–		
		Θ_D		70	80	–		
Optima View Direction		Free						(5)

Note 1: The brightness test equipment setup

I_B=60mA, Field=2° (As measuring "black" image, field=2° is the best testing condition.)

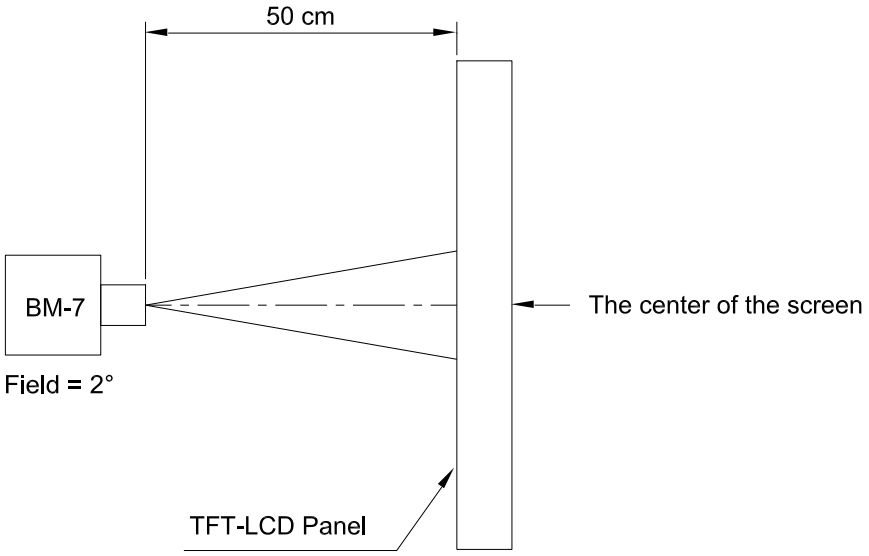

Note 2: Definition of contrast ratio (**C.R**)

$$C.R = \frac{\text{Brightness When LCD is at "White" State}}{\text{Brightness When LCD is at "Black" State}}$$

Note 3: Definition of response time

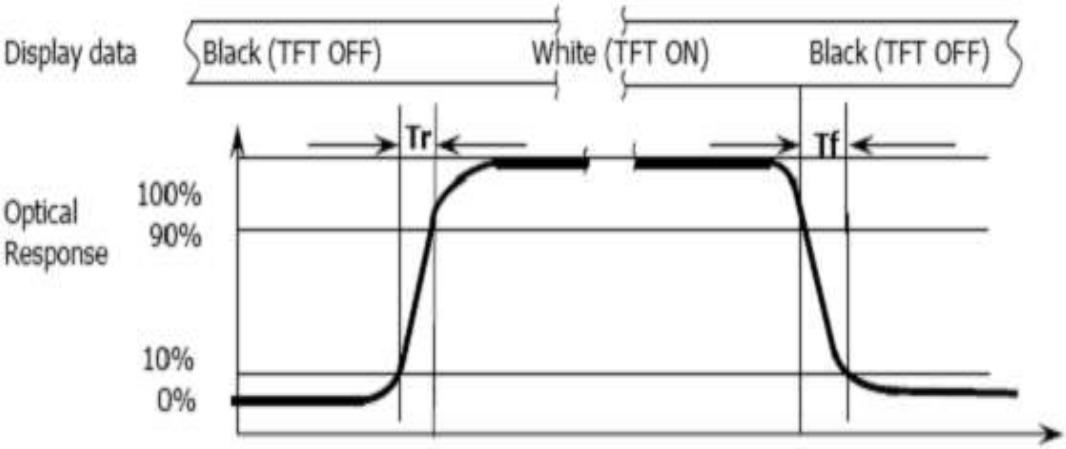

Note 4: Definition of viewing angle

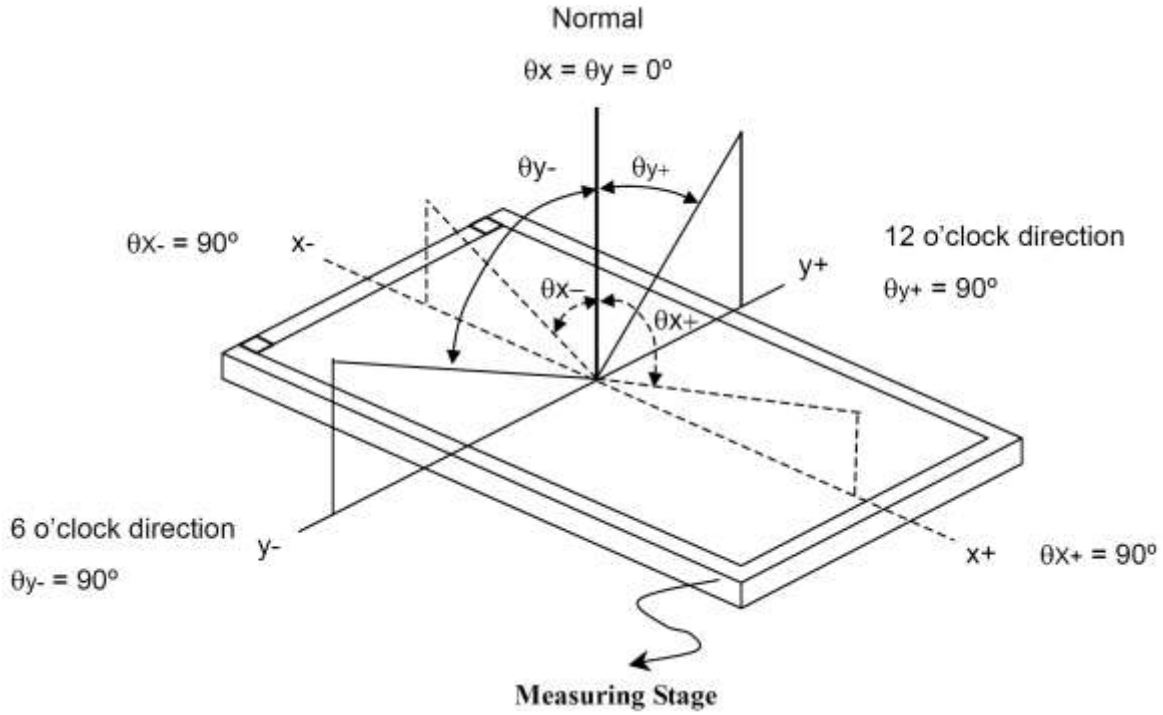

Note 5: Definition of uniformity (**Un**)

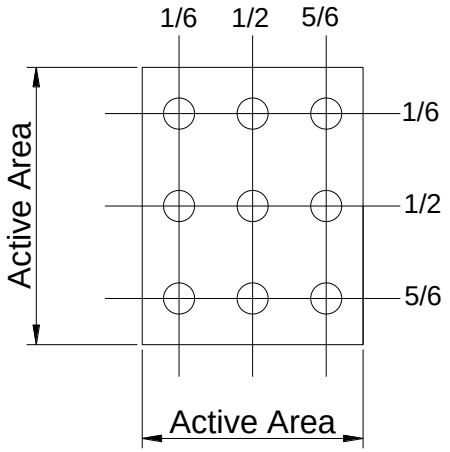

$$Un = \frac{Bmin}{Bmax} \times 100\%$$

8 Environment Absolute Maximum Ratings

Item	Symbol	Min	Max	Unit	Remark
Operation temperature range	Top	-10	60	℃	Ambient
Storage temperature range	Tst	-20	70	℃	Ambient

- Corrosive gas environment is not acceptable.
- TFT-LCD color will change slightly depending on environment temperature. This phenomenon is reversible. Current reduction rate of LED backlight is according to the graph indicated below:

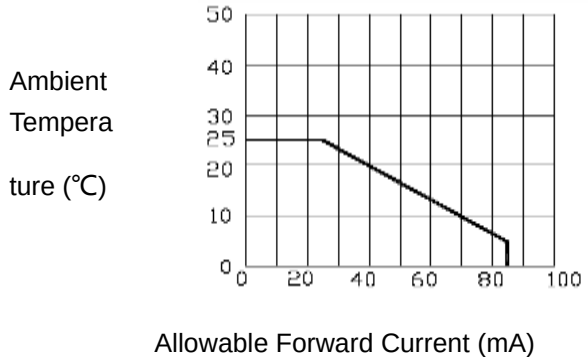

10 Inspection Standard

This standard apply to TFT module specification.

1. Inspection condition:

Under daylight lamp 20～40W，product distance inspector'eye 30cm.incline degree 30°。

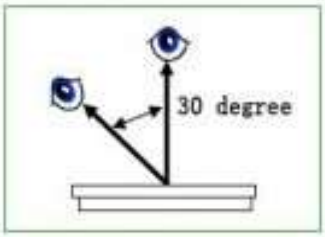

2. Inspection standard

NO.	Item	Inspection standard	Rate
2.1	**Dot**	Case of Dot defect is below ① Bright Dot (whit spot) : "0" ② Dark Dot (black spot) : "0" (In case of Dark Dot on Main TFT LCD) - NG if there's full Dot defect. - Damaged less than the size of sub-pixel is not counted as defect - Dots darker than the size of sub-pixel are not defined as bright dot defect	minor
2.2	line		

area / size（mm）	Acceptable number
Φ≤0.10	ignore
0.10<Φ≤0.15	3
0.15<Φ≤0.20	2
0.25<Φ≤0.25	1
0.25<Φ	0

Size（mm）		Acceptable number
ignore	W≤0.03	ignore
L≤4.0	0.03<W≤0.04	2
L≤4.0	0.04<W≤0.05	1
	0.05<W	Treat with dot non-conformance

11 Package

1 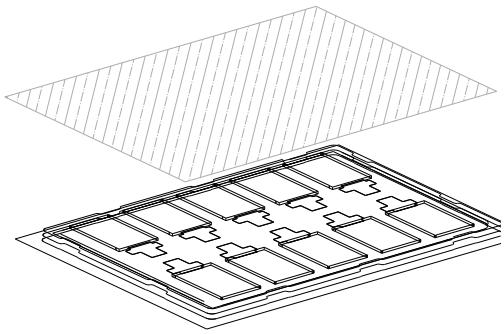	4 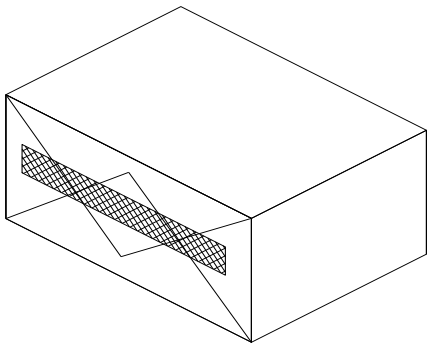
10 pcs per tray + 1 cover (EPE)	Packing bag
2 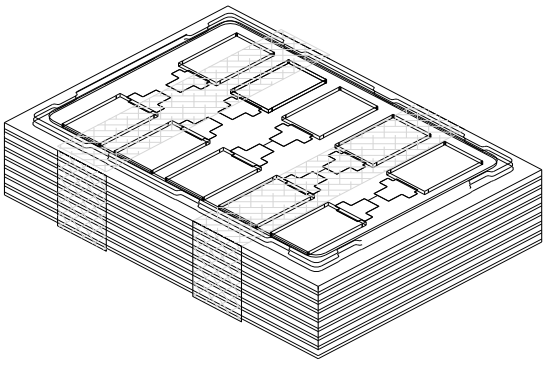	5 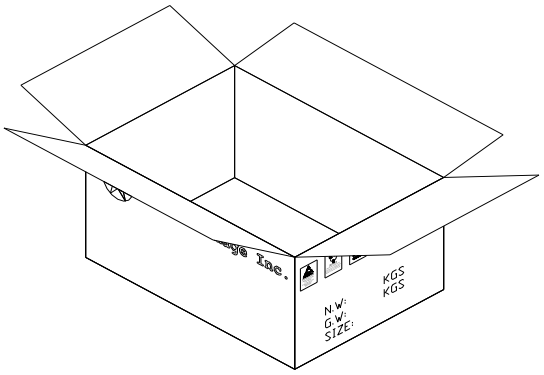
15 trays + 1 dummy tray = 150 ps	Putting bag into carton Protected by 2 pieces of cushion EPE sheet
3 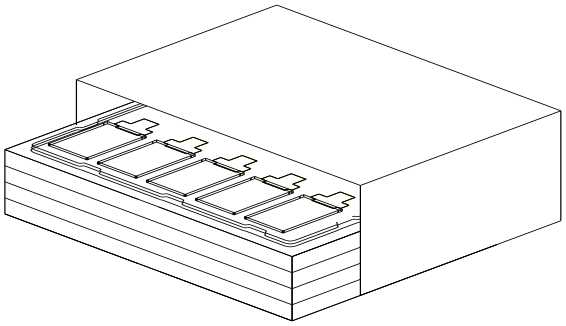	6 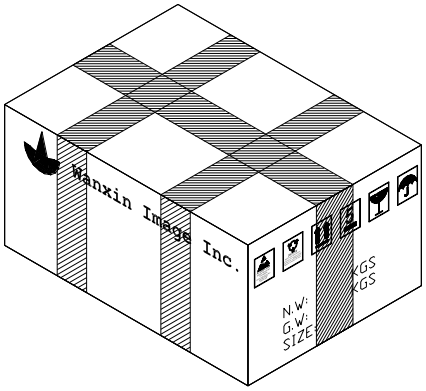
Putting trays into anti-electrostatic bag	Packing carton with sealing tape

	Carton outline size: 400×295×145 (mm)

12 Precautions

Please pay attentions to the followings as using the LCD module.

12.1Handling

(a) Do not apply strong mechanical stress like drop, shock or any force to LCD module. It may cause improper operation, even damage.

(b) Because the polarizer is very fragile and easy to be damaged, do not hit, press or rub the display surface with hard materials.

(c) Do not put heavy or hard material on the display surface, and do not stack LCD modules.

(d) If the display surface is dirty, please wipe the surface softly with cotton swab or clean cloth.

(e) Avoid using Ketone type materials (e.g. Acetone), Toluene, Ethyl acid or Methyl chloride to clean the display surface. It might damage the touch panel surface permanently. The recommended solvents are water and Isopropyl alcohol.

(f) Wipe off water droplets or oil immediately.

(g) Protect the LCD module from ESD. It will damage the LSI and the electronic circuit.

(h) Do not touch the output pins directly with bare hands.

(i) Do not disassemble the LCD module.

(j) Do not lift the FPC of Touch Panel.

12.2Storage

(a) Do not leave the LCD modules in high temperature, especially in high humidity for a long time.

(b) Do not expose the LCD modules to sunlight directly.

(c) The liquid crystal is deteriorated by ultraviolet. Do not leave it in strong

ultraviolet ray for a long time.

(d) Avoid condensation of water. It may cause improper operation.

(e) Please stack only up to the number stated on carton box for storage and transportation. Excessive weight will cause deformation and damage of carton box.

12.3Operation

(a) When mounting or dismounting the LCD modules, turn the power off.

(b) Protect the LCD modules from electric shock.

(c) The Driver IC control algorithms stated above should always obeyed to avoid damaging the LSI and electronic circuit.

(d) Be careful to avoid mixing up the polarity of power supply for backlight.

(e) Absolute maximum rating specified above has to be always kept in any case. Exceeding it may cause non-recoverable damage of electronic components or, nevertheless, burning.

(f) When a static image is displayed for a long time, remnant image is likely to occur.

(g) Be sure to avoid bending the FPC to an acute shape, it might break FPC.

(h) Most of the touch screens have air vent to equalize the inside air pressure to the outside one. The air vent must be open and liquid contact must be avoided as the liquid may be absorbed if the liquid is accumulated near the air vent.

(i) For the fragility of ITO film, it should avoid to use too tapering pen as the input material.

12.4Touch Panel Mounting Notes

(a) If a cushion is used between bezel/housing and film must be choose as free as enough to absorb the expansion and contraction to avoid the distortion of film.

(b) The cushion must be placed out of the Viewing Area.

(c) Bezel/Housing edge must be posited between Key Area and Viewing Area. The edge enters the Key Area may cause unexpected input if the gap is too narrow or foreign particles like dusts exist between Bezel/Housing and ITO film.

(d) Mounting example:

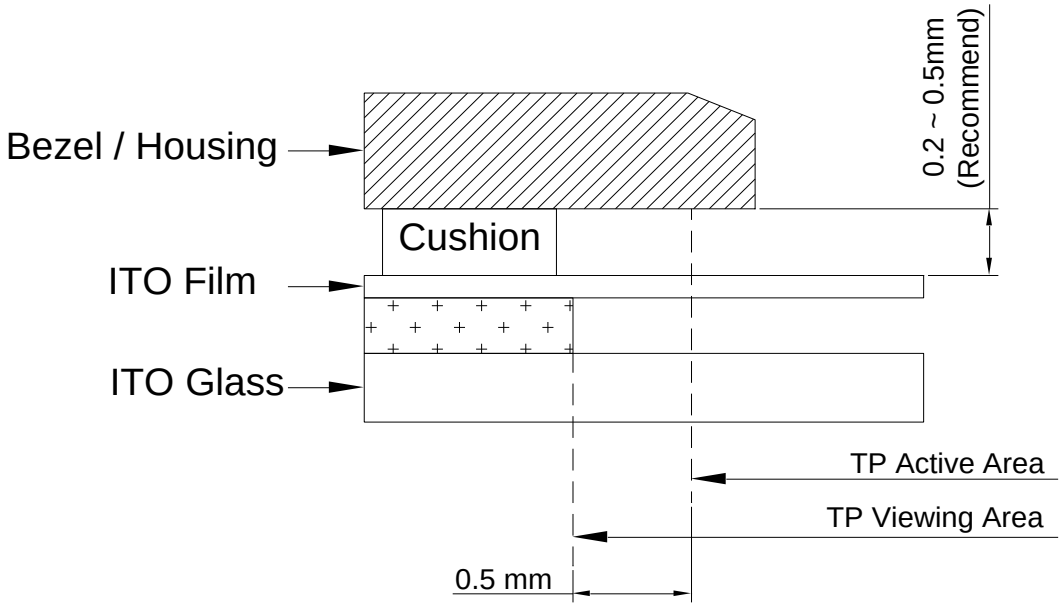

The corner part has conductivity. Do not touch any metal part after mounting.

12.5Others

a) If the liquid crystal leaks from the panel, it should be kept away from the eyes or mouth.

b) For the fragility of polarizer, it is recommended to attach a transparent protective plate over the display surface.

c) It is recommended to peel off the protection film on the polarizer slowly so that the electrostatic charge can be minimized.

13 Records of Version

Version	Revise Date	Page	Content
A	2019-04-29	All	New released