Specifications

TFT-LCDmodule

Model No：QY28009A0-00

Customer name:

The project name:

For Customer's Acceptance	
Approved by	**Comment**

	Signature	Date
Prepared by		
Checked by		
Approved by		

Contents

1 General Description 3
1.1 Features 3
1.2 Application 3
2 Outline Dimension 4
3 Electrical Characteristics 5
3.1 TFT-LCD Module 5
3.2 Back-Light Unit 5
4 Block Diagram 6
5 TFT-LCM Interface Specification 7
6 Description of Interface'Signal 8
6.1 RGB Interface Timing Characteristics 8
6.2 DC Characteristics 8
6.3 AC Characteristics 9
6.4 Reset Characteristics 9
7 Optical Specification 10
8 Environment Absolute Maximum Ratings 13
9 Reliability Test Items 13
10 Inspection Standard 14
11 Package 15
12 Precautions 16
12.1 Handling 16
12.2 Storage 16
12.3 Operation 17
12.4 Touch Panel Mounting Notes 17
12.5 Others 18
13 Records of Version 19

1 General Description

QY28009A0-00 is a transmissive type a-Si TFT-LCD (amorphous silicon thin film transistor liquid crystal display) module, which is composed of a TFT-LCD panel, a driver circuit a backlight unit, The panel size is2.8inch and thresolution is 240x320. High image quality a-Si TFT LCD module. Partial-screen display function is available. Sleep and Stand-by modes are available for power saving.

1.1 Features

No	Item	Specification	Remark
1	Display Mode	Normally Black	
2	Screen Size	2.8inch (diagonal)	
3	Resolution	240XRGBX320	
4	Color Number	262K	
5	Color Arrangement	RGB-stripe	
6	Driver IC	ILI9341V	
7	Back Light	White LED*4	
8	Viewing Direction	12O’CLOCK	
9	Interface	SPI 4W 8BIT	
10	Surface Treatment	UV Cut	

1.2 Application

- Mobile phone.
- Portable multimedia device.

2 Outline Dimension

The mechanical detail is shown in Fig. 1 and summarized in Table 1 below.

Parameter	Specifications	Unit
Outline dimensions	50 (W) x69.2(H) x2.3+-0.1(D) (LCM,no include FPC)	mm
Active area	43.2(W) x57.6(H)	mm
Resolution	240(H)RGBx 320(V) dots	-
Dot size	0.153(H) ×0.153	mm
Module brightness	300	cd/㎡

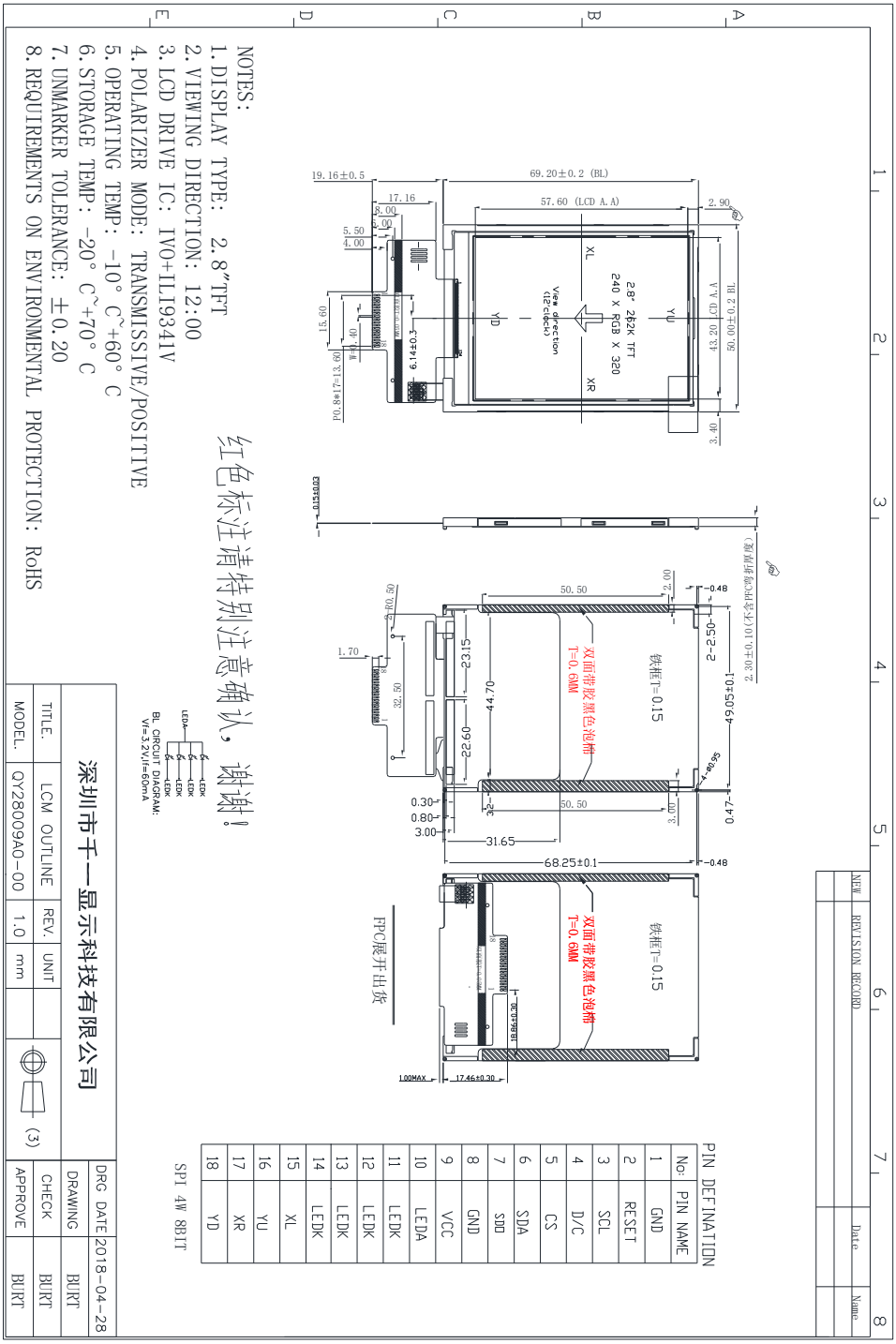

Figure 1: Module specification of the module

3 Electrical Characteristics

3.1 TFT-LCD Module

Ta=25℃

Item	Symbo	Value			Unit	Notes
		Min	Typ	Max		
Supply Voltage for logic	Vcc	2.5	2.8	3.3	V	
	Vci	2.5	2.8	3.3		
TFT Gate ON Voltage	VGH *	11.5		19	V	
TFT Gate OFF Voltage	VGL	-15.5		-7	V	
Operating temperature	Top	-20		+70	℃	
Storage temperature	Tst	-30		+80	℃	

3.2 Back-Light Unit

Item	Symbol	Min.	Typ.	Max.	Unit	Remark
Current	IF	--	80	100	mA	IF=80mA VF=3.2V
Forward voltage	VF	3.0	3.2	3.4	V	
Chroma	X	0.240		0.28		
	Y	0.250		0.29		
Brightness	L	4500			Cd/m2	
Uniformity	UBL	80			%	

- 4 LED
- The luminous intensity of LED is strongly dependent on the driving current.
- It is recommended the input of backlight to be constant current rather than constant voltage.

1	GND	Ground	
2	RESET	Reset signal input Pin	
3	SCL	Second Data lane in 2 data lane serial interface.	
4	D/C	This pin is used to be serial interface clock.	
5	CS	Chip select input pin.	
6	SDA	The data is latched on the rising edge of the SCL signal.	
7	SDO	The data is outputted on the falling edge of the SCL signal	
8	GND	Ground	
9	VCC	Power supply input for LCM:2.8V	
10	LED-A	Anode pin of backlight	
11~14	LED-K	Cathode pin OF backlight	
15	XL	NC	
16	YU	NC	
17	XR	NC	
18	YD	NC	

5 TFT-LCM Interface Specification

6 Description of Interface'Signal

6.1 RGB Interface Timing Charateristics

8.7.4 RGB Interface Timing

The timing chart of RGB interface DE mode is shown as follows.

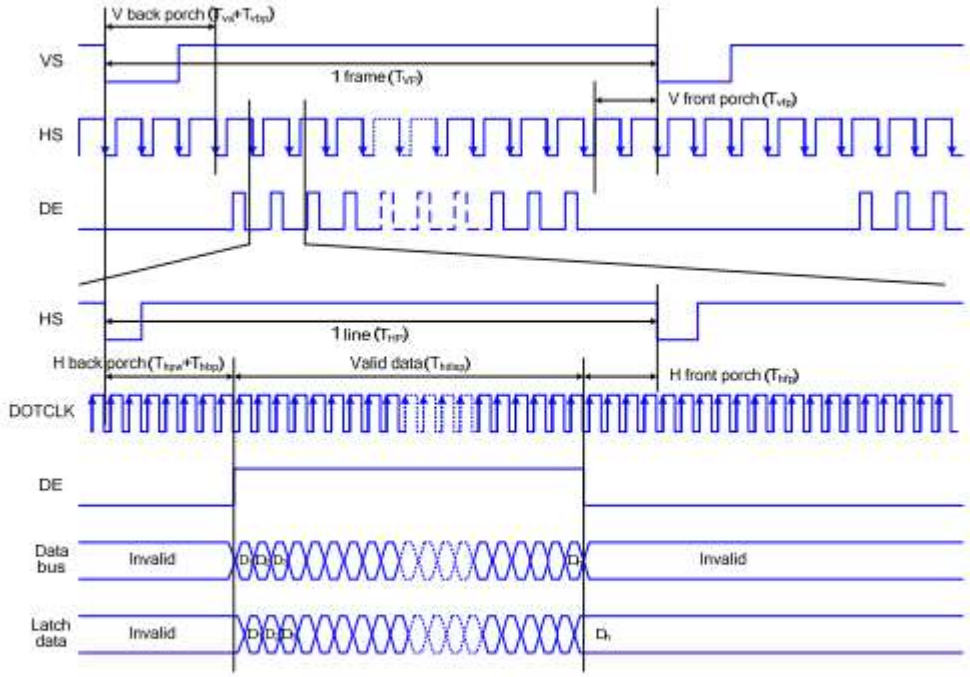

Note: The setting of front porch and back porch in host must match that in IC as this mode.

Figure 28 Timing Chart of Signals in RGB Interface DE Mode

6.2 DC Characteristics

7.2 DC Characteristics

Parameter	Symbol	Condition	Specification			Unit	Related Pins
			MIN.	TYP.	MAX.		
Power & Operation Voltage							
System Voltage	VDD	Operating voltage	2.5	2.8	4.8	V	
Interface Operation Voltage	VDDI	I/O Supply Voltage	1.65	1.8	3.3	V	
Gate Driver High Voltage	VGH		11.5		18	V	Note 4
Gate Driver Low Voltage	VGL		-7.6		-12	V	
Gate Driver Supply Voltage		| VGH-VGL |	-		30	V	Note 5
Input / Output							
Logic-High Input Voltage	VIH		0.7VDDI		VDDI	V	Note 1
Logic-Low Input Voltage	VIL		VSS		0.3VDDI	V	Note 1
Logic-High Output Voltage	VOH	IOH = -1.0mA	0.8VDDI		VDDI	V	Note 1
Differential Input High Threshold Voltage	VIT+			0	50	mV	MIPI_CLK MIPI_Data
Differential Input Low Threshold Voltage	VIT-		-50	0		mV	
Single-ended Receiver Input Operation Voltage Range	VIR		0.5		1.2	V	
Logic-Low Output Voltage	VOL	IOL = +1.0mA	VSS		0.2VDDI	V	Note 1
Logic-High Input Current	IIH	VIN = VDDI			1	uA	Note 1
Logic-Low Input Current	IIL	VIN = VSS	-1			uA	Note 1
Input Leakage Current	IIL	IOH = -1.0mA	-0.1		0.1	uA	Note 1
VCOM Voltage							
VCOM amplitude	VCOM			VSS		V	
Source Driver							
Gamma Reference Voltage(Positive)	VAP		4.4		6.4	V	
Gamma Reference Voltage(Negative)	VAN		-2.6		-4.6	V	
Source Output Settling Time	Tr	Below with 99% precision			10	us	Note 2

Table 2 Basic DC Characteristics

6.3 AC Characteristics

7.5.4 RGB Interface Characteristics :

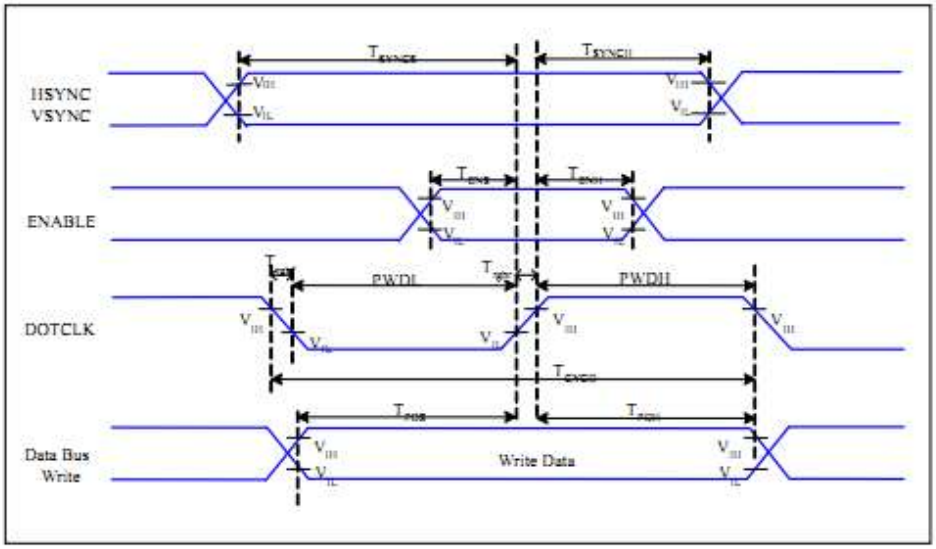

Figure 4 RGB Interface Timing Characteristics

VDDI=1.8,VDD=2.8, AGND=DGND=0V, Ta=25 ℃

Signal	Symbol	Parameter	MIN	MAX	Unit	Description
HSYNC, VSYNC	T_{SYNCS}	VSYNC, HSYNC Setup Time	5	-	ns	
ENABLE	T_{ENS}	Enable Setup Time	5	-	ns	
	T_{ENH}	Enable Hold Time	5	-	ns	
DOTCLK	PWDH	DOTCLK High-level Pulse Width	13	-	ns	
	PWDL	DOTCLK Low-level Pulse Width	13	-	ns	
	T_{CYCD}	DOTCLK Cycle Time	28	-	ns	
	Trghr, Trghf	DOTCLK Rise/Fall time	-	15	ns	
DB	T_{PDS}	PD Data Setup Time	5	-	ns	
	T_{PDH}	PD Data Hold Time	5	-	ns	

Table 7 18/16 Bits RGB Interface Timing Characteristics

6.4 Reset Timing

7.5.6 Reset Timing:

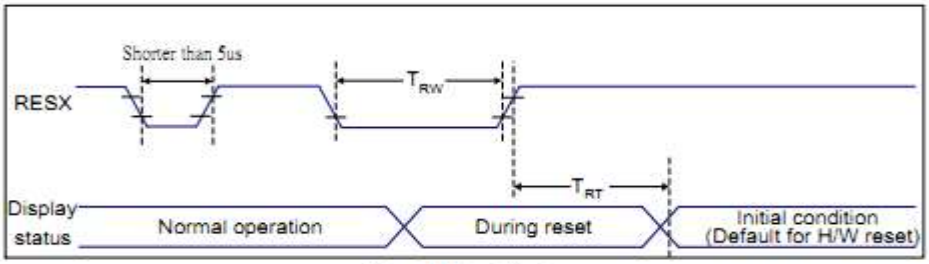

Figure 10 Reset Timing

VDDI=1.8,VDD=2.8, AGND=DGND=0V, Ta=25℃

Related Pins	Symbol	Parameter	MIN	MAX	Unit
RESX	TRW	Reset pulse duration	10	-	us
	TRT	Reset cancel	-	5 (Note 1, 5)	ms
				120(Note 1, 6, 7)	ms

Table 10 Reset Timing

Notes:

1. The reset cancel includes also required time for loading ID bytes, VCOM setting and other settings from NVM (or similar device) to registers. This loading is done every time when there is HW reset cancel time (tRT) within 5 ms after a rising edge of RESX.

2. Spike due to an electrostatic discharge on RESX line does not cause irregular system reset according to the table below:

RESX Pulse	Action
Shorter than 5us	Reset Rejected
Longer than 9us	Reset
Between 5us and 9us	Reset starts

3. During the Resetting period, the display will be blanked (The display is entering blanking sequence, which maximum time is 120 ms, when Reset Starts in Sleep Out –mode. The display remains the blank state in Sleep In –mode.) and then return to Default condition for Hardware Reset.

4. Spike Rejection also applies during a valid reset pulse as shown below:

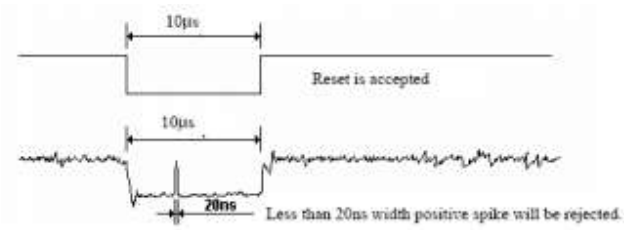

5. When Reset applied during Sleep In Mode.

6. When Reset applied during Sleep Out Mode.

7. It is necessary to wait 5msec after releasing RESX before sending commands. Also Sleep Out command cannot be sent for 120msec.

Note 1: The brightness test equipment setup

I_B=60mA, Field=2° (As measuring “black” image, field=2° is the best testing condition.)

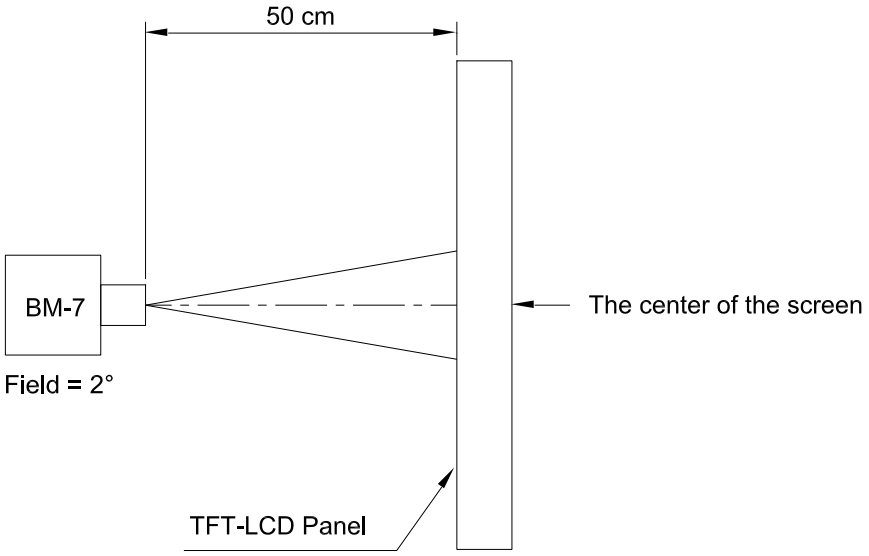

Note 2: Definition of contrast ratio (**C.R**)

$$C.R = \frac{\text{Brightness When LCD is at “White” State}}{\text{Brightness When LCD is at “Black” State}}$$

Note 3: Definition of response time

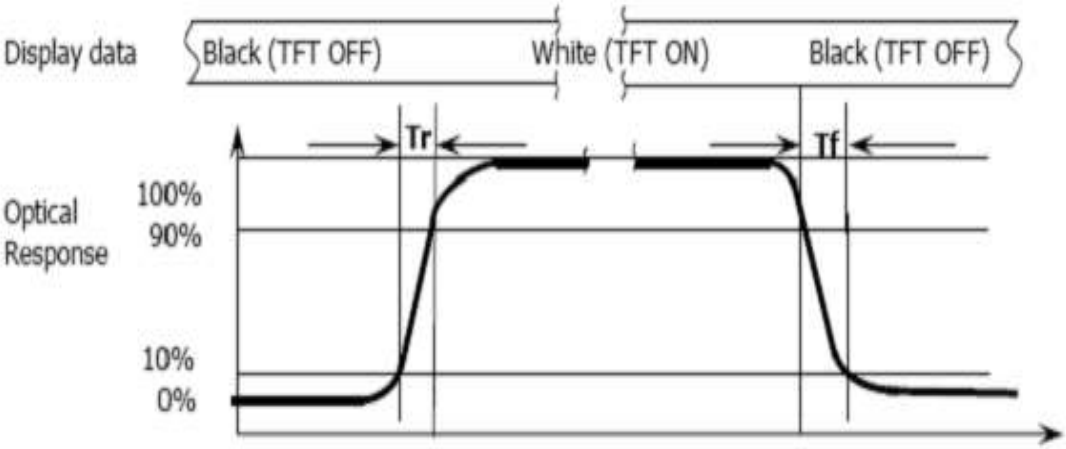

Note 4: Definition of viewing angle

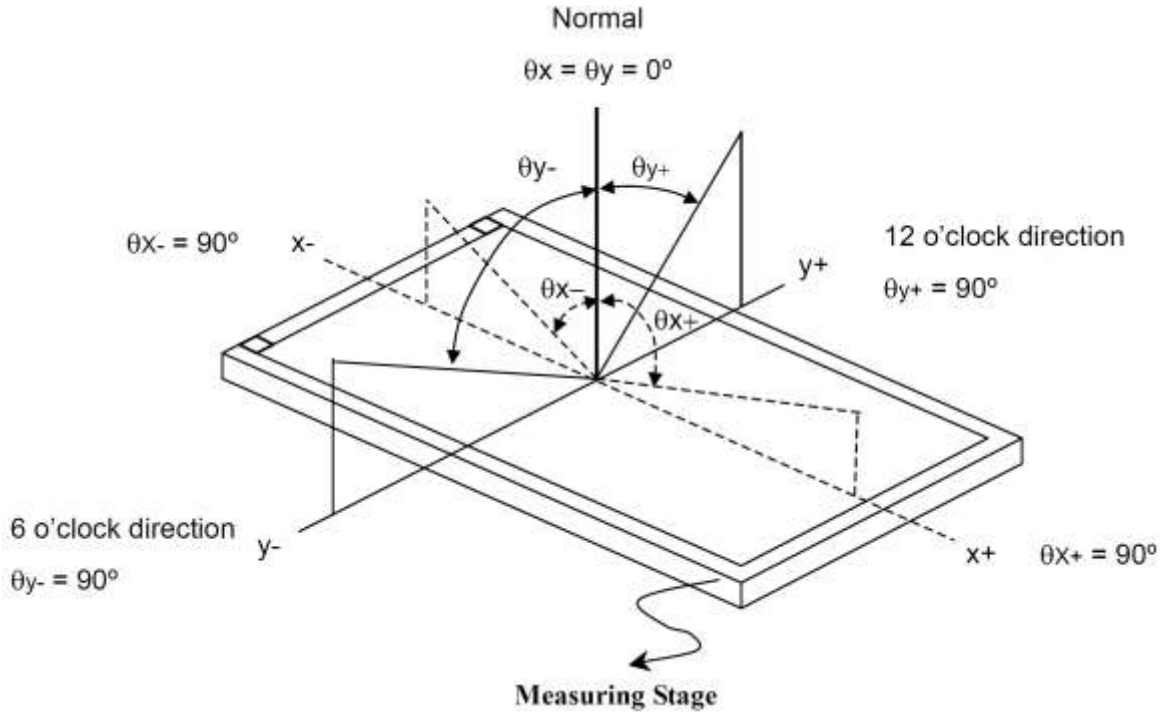

Note 5: Definition of uniformity (**Un**)

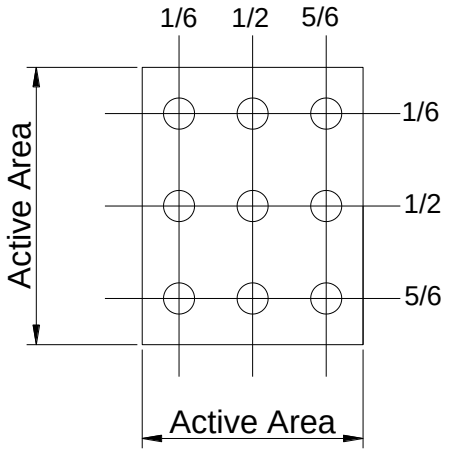

$$Un = \frac{Bmin}{Bmax} \times 100\%$$

8 Environment Absolute Maximum Ratings

Item	Symbol	Min	Max	Unit	Remark
Operation temperature range	Top	-10	60	℃	Ambient
Storage temperature range	Tst	-20	70	℃	Ambient

- Corrosive gas environment is not acceptable.
- TFT-LCD color will change slightly depending on environment temperature. This phenomenon is reversible. Current reduction rate of LED backlight is according to the graph indicated below:

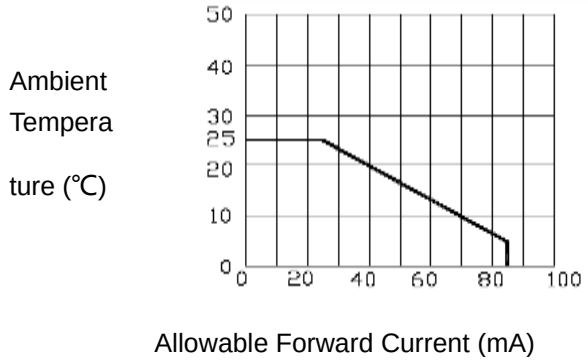

10 Inspection Standard

This standard apply to TFT module specification.

1. Inspection condition:

Under daylight lamp 20～40W，product distance inspector'eye 30cm.incline degree 30°。

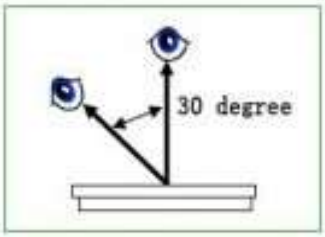

2. Inspection standard

NO.	Item	Inspection standard	Rate
2.1	**Dot**	Case of Dot defect is below ① Bright Dot (whit spot) : "0" ② Dark Dot (black spot) : "0" (In case of Dark Dot on Main TFT LCD) - NG if there's full Dot defect. - Damaged less than the size of sub-pixel is not counted as defect - Dots darker than the size of sub-pixel are not defined as bright dot defect	minor
2.2	line		

area / size（mm）	Acceptable number
Φ≤0.10	ignore
0.10<Φ≤0.15	3
0.15<Φ≤0.20	2
0.25<Φ≤0.25	1
0.25<Φ	0

Size（mm）		Acceptable number
ignore	W≤0.03	ignore
L≤4.0	0.03<W≤0.04	2
L≤4.0	0.04<W≤0.05	1
	0.05<W	Treat with dot non-conformance

11 Package

1 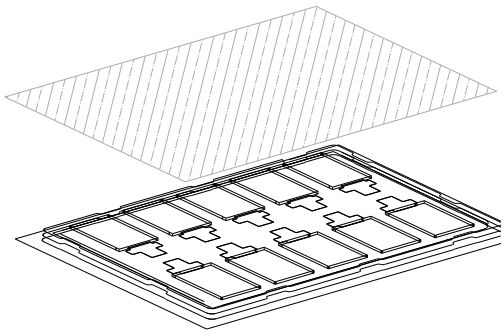	4 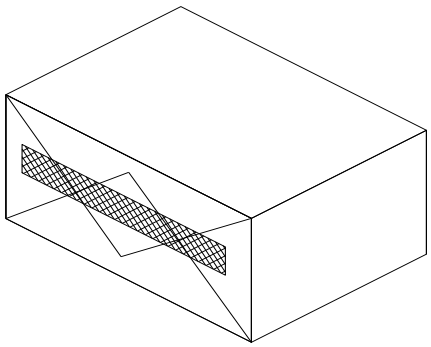
10 pcs per tray + 1 cover (EPE)	Packing bag
2 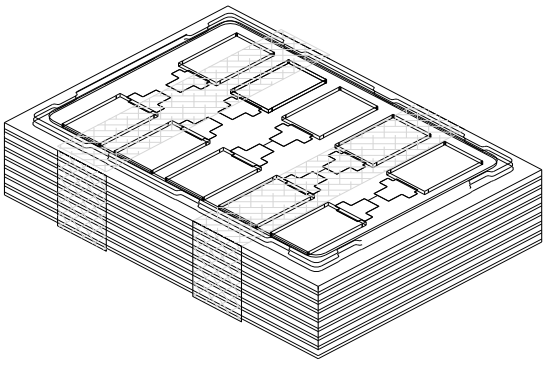	5 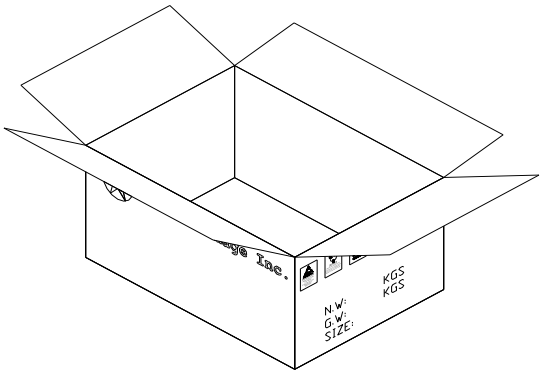
15 trays + 1 dummy tray = 150 ps	Putting bag into carton Protected by 2 pieces of cushion EPE sheet
3 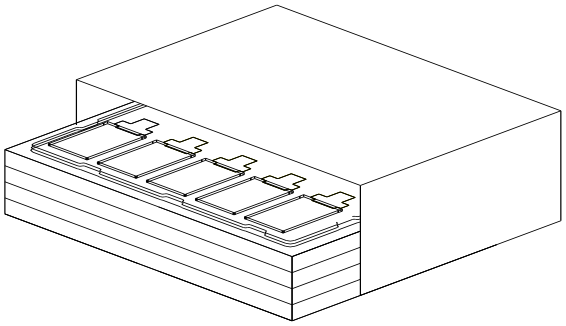	6 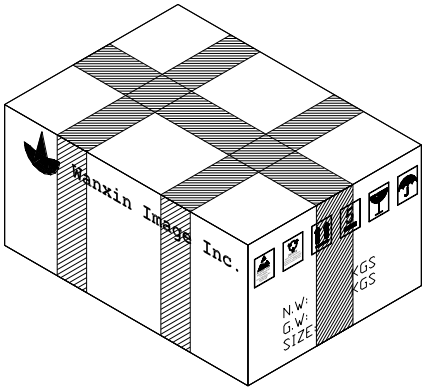
Putting trays into anti-electrostatic bag	Packing carton with sealing tape

	Carton outline size: 400×295×145 (mm)

12 Precautions

Please pay attentions to the followings as using the LCD module.

12.1Handling

(a) Do not apply strong mechanical stress like drop, shock or any force to LCD module. It may cause improper operation, even damage.

(b) Because the polarizer is very fragile and easy to be damaged, do not hit, press or rub the display surface with hard materials.

(c) Do not put heavy or hard material on the display surface, and do not stack LCD modules.

(d) If the display surface is dirty, please wipe the surface softly with cotton swab or clean cloth.

(e) Avoid using Ketone type materials (e.g. Acetone), Toluene, Ethyl acid or Methyl chloride to clean the display surface. It might damage the touch panel surface permanently. The recommended solvents are water and Isopropyl alcohol.

(f) Wipe off water droplets or oil immediately.

(g) Protect the LCD module from ESD. It will damage the LSI and the electronic circuit.

(h) Do not touch the output pins directly with bare hands.

(i) Do not disassemble the LCD module.

(j) Do not lift the FPC of Touch Panel.

12.2Storage

(a) Do not leave the LCD modules in high temperature, especially in high humidity for a long time.

(b) Do not expose the LCD modules to sunlight directly.

(c) The liquid crystal is deteriorated by ultraviolet. Do not leave it in strong

ultraviolet ray for a long time.

(d) Avoid condensation of water. It may cause improper operation.

(e) Please stack only up to the number stated on carton box for storage and transportation. Excessive weight will cause deformation and damage of carton box.

12.3Operation

(a) When mounting or dismounting the LCD modules, turn the power off.

(b) Protect the LCD modules from electric shock.

(c) The Driver IC control algorithms stated above should always obeyed to avoid damaging the LSI and electronic circuit.

(d) Be careful to avoid mixing up the polarity of power supply for backlight.

(e) Absolute maximum rating specified above has to be always kept in any case. Exceeding it may cause non-recoverable damage of electronic components or, nevertheless, burning.

(f) When a static image is displayed for a long time, remnant image is likely to occur.

(g) Be sure to avoid bending the FPC to an acute shape, it might break FPC.

(h) Most of the touch screens have air vent to equalize the inside air pressure to the outside one. The air vent must be open and liquid contact must be avoided as the liquid may be absorbed if the liquid is accumulated near the air vent.

(i) For the fragility of ITO film, it should avoid to use too tapering pen as the input material.

12.4Touch Panel Mounting Notes

(a) If a cushion is used between bezel/housing and film must be choose as free as enough to absorb the expansion and contraction to avoid the distortion of film.

(b) The cushion must be placed out of the Viewing Area.

(c) Bezel/Housing edge must be posited between Key Area and Viewing Area. The edge enters the Key Area may cause unexpected input if the gap is too narrow or foreign particles like dusts exist between Bezel/Housing and ITO film.

(d) Mounting example:

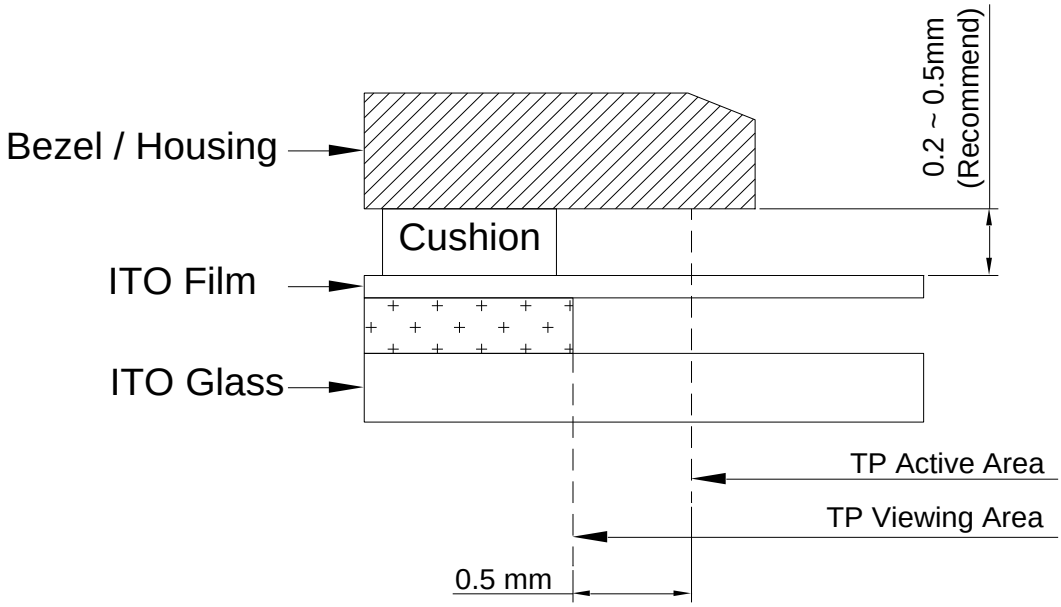

The corner part has conductivity. Do not touch any metal part after mounting.

12.5Others

a) If the liquid crystal leaks from the panel, it should be kept away from the eyes or mouth.

b) For the fragility of polarizer, it is recommended to attach a transparent protective plate over the display surface.

c) It is recommended to peel off the protection film on the polarizer slowly so that the electrostatic charge can be minimized.

13 Records of Version

Version	Revise Date	Page	Content
A	2018-12-10	All	New released