REVISION	RECORD	Date
V1.0	First release	2025-3-29

Front

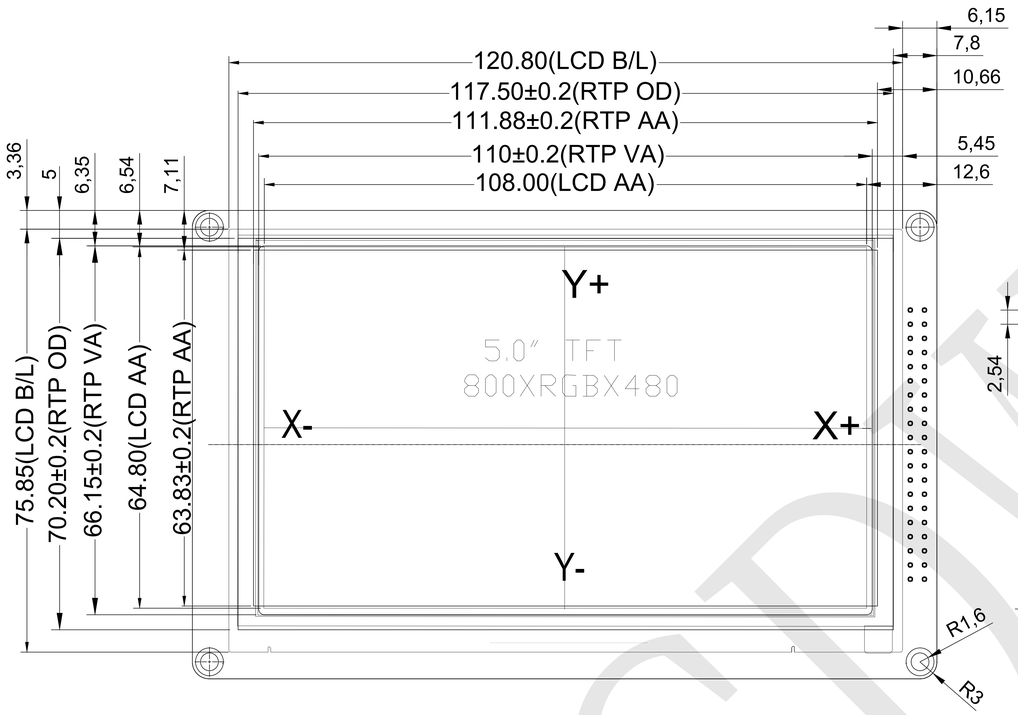

Side

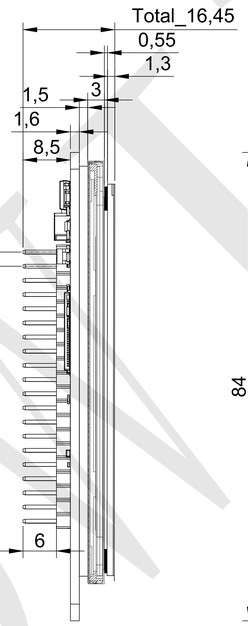

Back

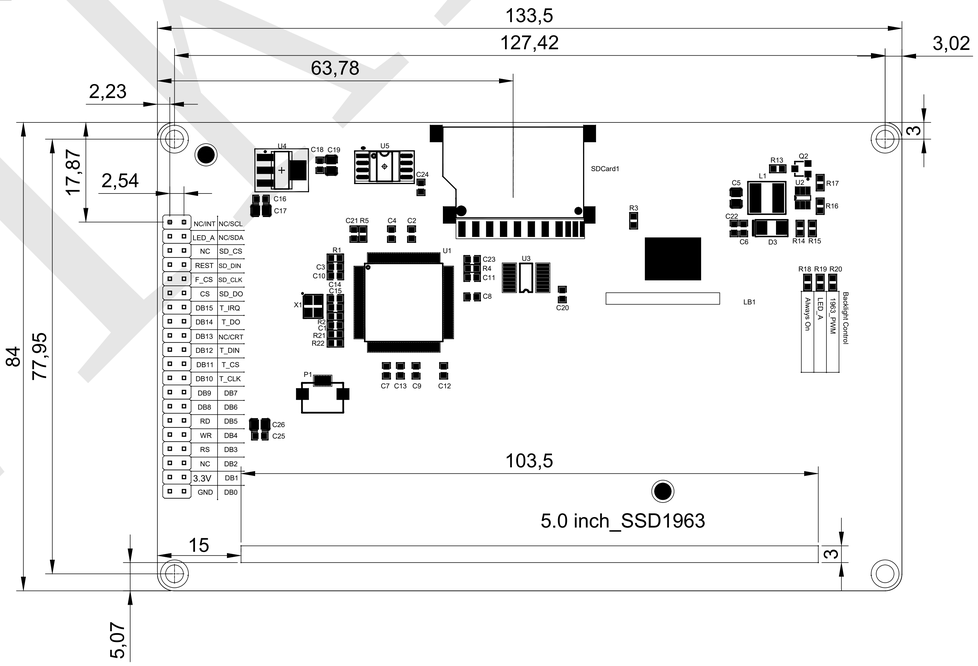

NOTES:

1. DISPLAY TYPE: 5.0″ TFT
2. VIEWING DIRECTION: 12 0’ Clock
3. RESOLUTION: 800*RGB*480
4. POLARIZER MODE: TRANSMISSIVE/POSITIVE
5. UNMARKER TOLERANCE: ±0.2
6. OPERATING TEMP: -20℃~+70℃

						DRG DATE	2025-3-29
						DRAWING	David
TITLE.	LCM OUTLINE	REV.	UNIT	SIZE	(3)	CHECK	Green
SKU.	MPI4305	V1.0	mm	A4		APPROVE	Rose

LCDWIKI