REVISION	RECORD	Date

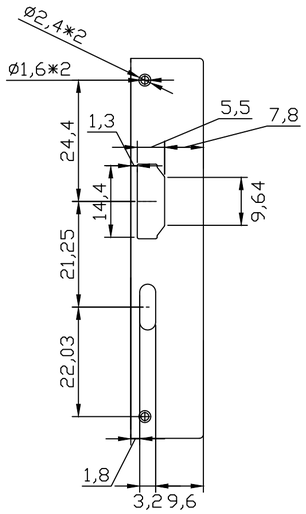

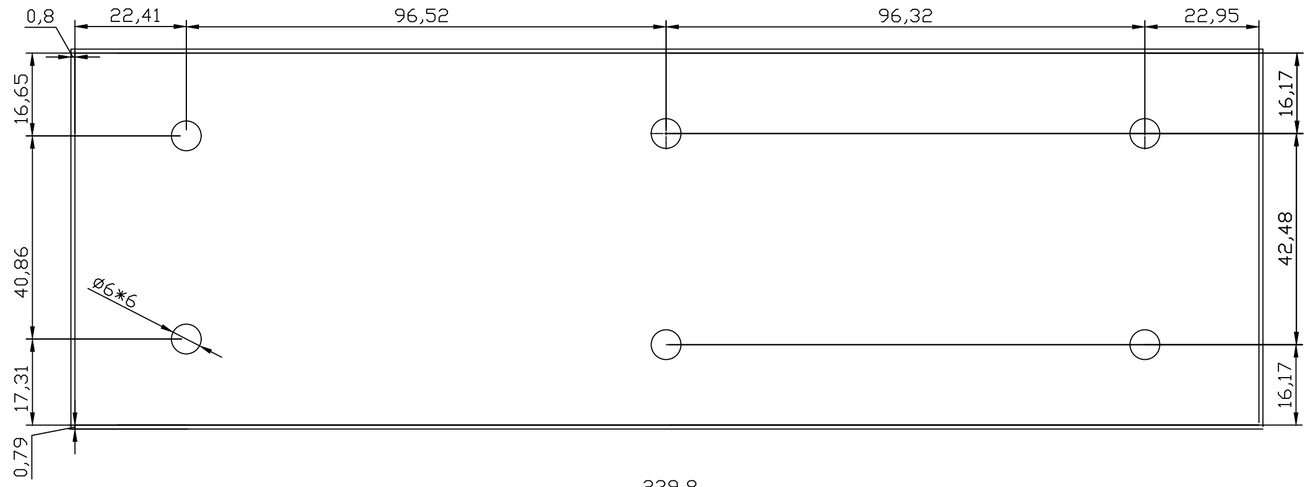

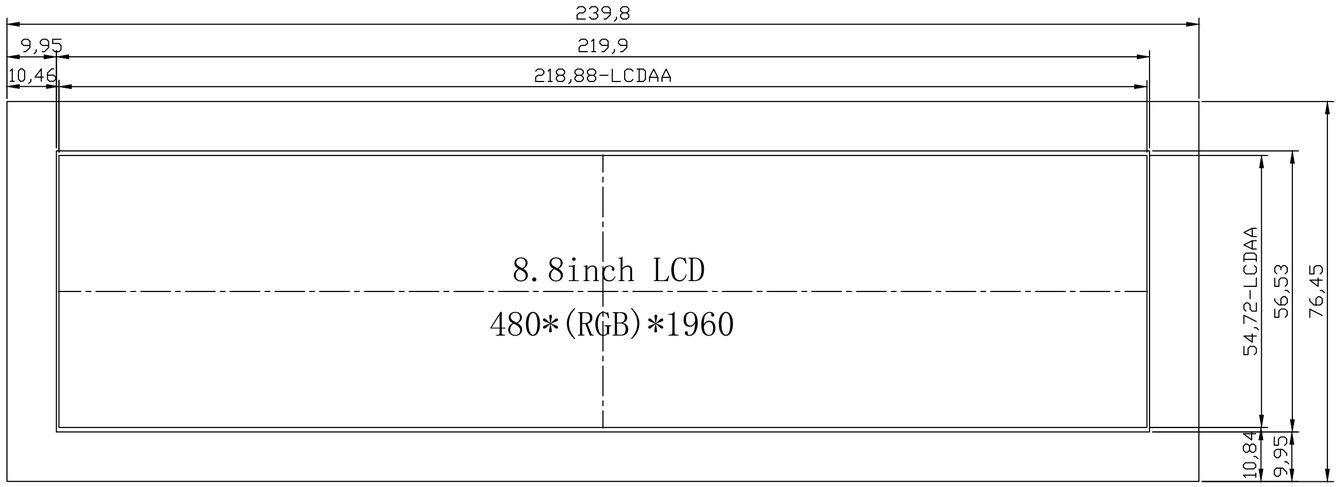

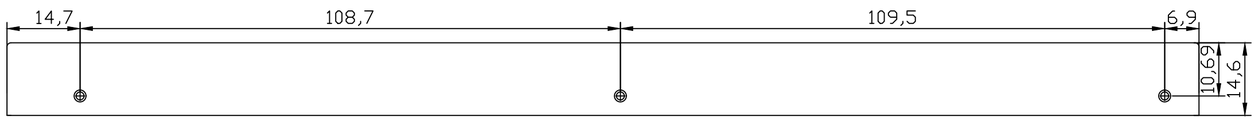

NOTES:
1. DISPLAY TYPE:IPS
2. VIEWING DIRECTION:ALL
3. DRIVE IC:OTA7290B
4. RESOLUTION:480(RGB)*1960
5. INTERFACE:HDMI
6. UNMARKER TOLERANCE:±0.2
7. OPERATING TEMP:-30℃~80℃

						DRG DATE	2025.02.19
						DRAWING	David
TITLE.	LCM OUTLINE	REV.	UNIT	SIZE	(3)	CHECK	Green
MODEL.			mm	A4		APPROVE	Rose